Sanisuite

WC
1x 40mm upper inlet
2x 40mm side inlets

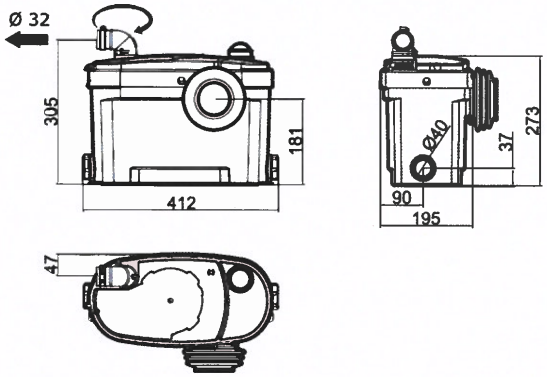

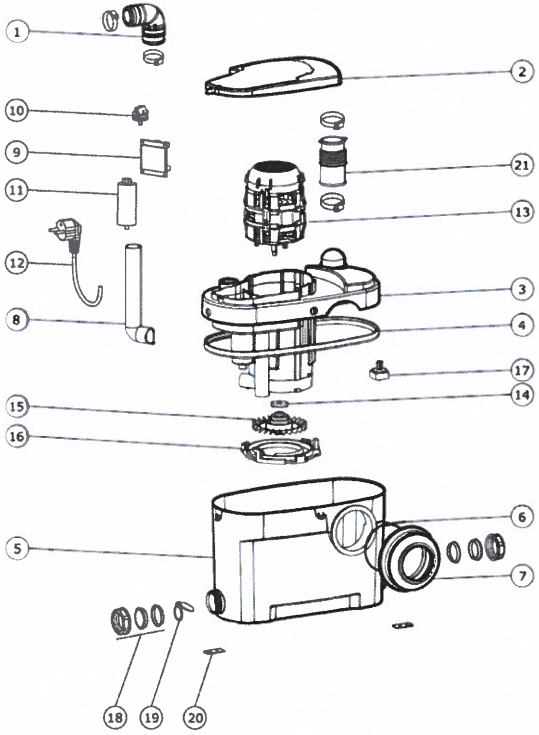

▶ Vertical discharge	Up to 3 m
▶ Horizontal discharge	Up to 30 m
▶ Discharge	32 mm
▶ Grinding system	Grater
▶ Power	220-240V 50Hz
▶ Power consumption	470W
▶ Index of protection	IP44
▶ Electric class	I

A low-cost macerator to install a **complete bathroom** with shower